73520-9993 Dodge RAM Truck

Preschool Series 6 Volt

Age Range: **1 1/2 to 4 years**
Weight Limit: **50 lbs / 23 kg**
Surfaces: **Hard**
Speed: 2.5 Forward
2.5 reverse
Colors: Red
Intro: Aug 2001
Suggested Retail: $129..99
Box Dimensions:
16.37 x 20.62 x 35.25
Warranty One Year Vehicle
6 Months Battery

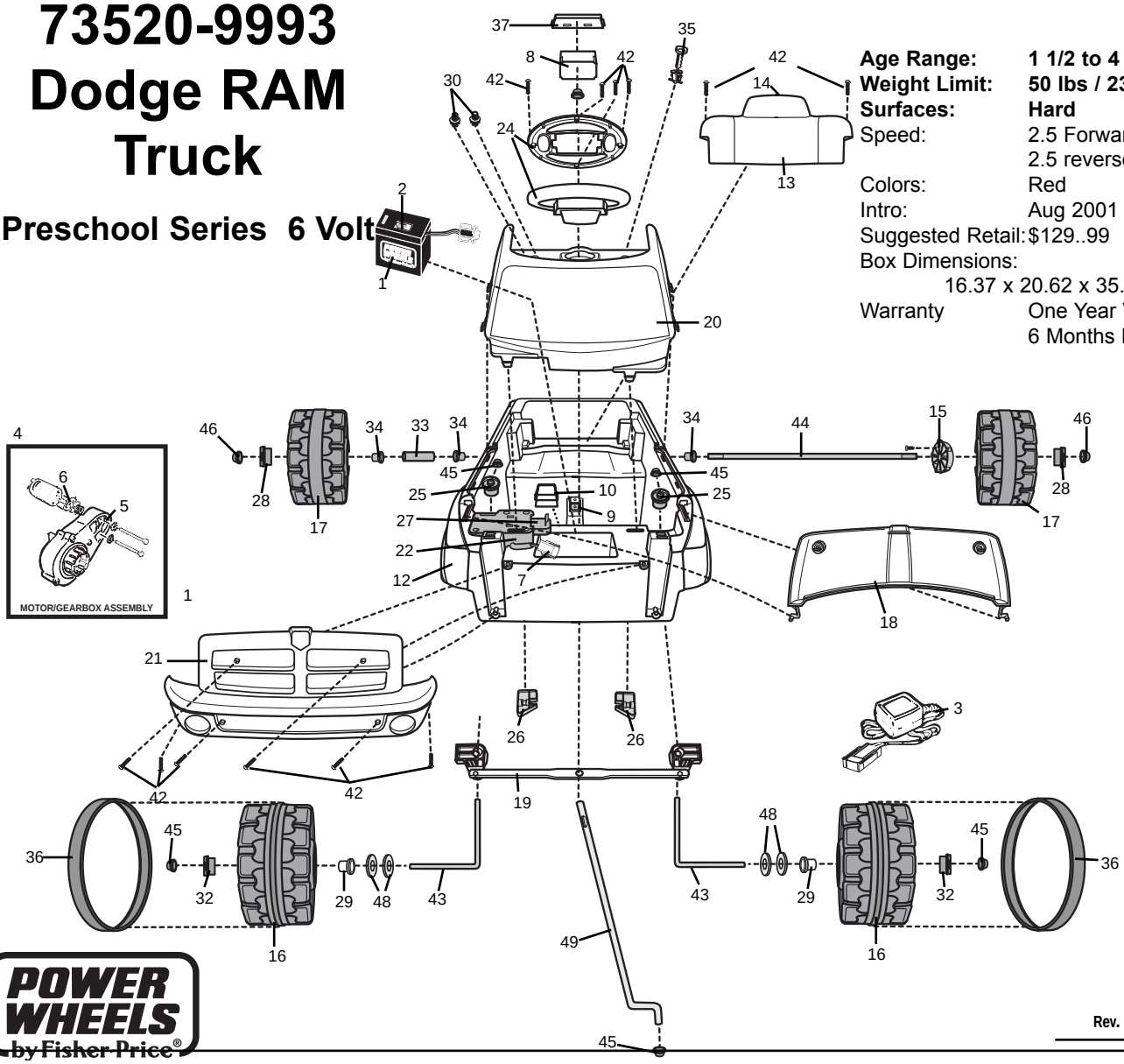

POWER WHEELS by Fisher-Price®

Rev. 02/11/04

Item No.	Description	Part No.	Qty.
Working / Electrical Parts			
1	Battery	00801-1234	1
2	Fuse	0801-0151	1
3	Charger	00801-0975	1
4	**Motor Gearbox Assembly**	**00968-2908**	**1**
5	**Gearbox W/out Motor N/A**	**00968-2808**	**1**
6	**Motor Pinion Assembly N/A**	**74260-9539**	**1**
7	**Main Harness Assembly**	**73520-9799**	**1**
8	Soundbox	73520-9209	1
9	Control Switch F/R	00801-0885	1
10	Footboard Assm.	74780-9159	1
Plastic / Other Parts			
12	Body N/A	73520-6109	1
13	Seat N/A	4000-0254	1
14	Lock Fastener	78570-2439	1
15	Driver	73233-2239	1
16	Wheel, Front	73520-2459	2
17	Wheel, Rear	73520-2469	2
18	Hood Assembly	4000-0255	1
19	Steering Linkage Assm. N/A	4000-0253	1
20	Cab	73520-2119	1
21	Grill	73520-2139	1
22	Harness Cover	73520-2149	1
24	Steering Wheel	4000-0243	1
25	Post Bushing	73520-2339	2
26	Axle Support	73520-2349	2
27	Battery Retainer	4000-0252	1
28	Rectangular Bushing w/Rectangular Open	77410-2679	2
29	Axle Bushing(small)	74770-2539	3
30	Knob Dash	74550-2719	2
32	Rectangular Bushing w/Circular Open	73520-2439	2
33	Spacer N/A	76136-4419	1
34	Round Bushing (large)	74550-2689	3
35	Key Housing	78490-9369	1
36	Traction Band	73520-2019	2
37	Steering Wheel Cover	73520-2179	1
Hardware / Metal Parts			
40	Washer N/A Please order hardware bag	0801-0195	2
42	Screw 8 x .75	0912-8001	12
43	Front Axle	73241-4509	2
44	Rear Axle	73520-4509	1
45	Retainer .354	0801-0604	8
46	Retainer .437	0801-0226	3
47	Screw #10-12	0801-0255	1
48	Washer 5/16	0801-0253	4
49	Steering Column	74780-4239	1

Item No.	Description	Part No.	Qty.
Parts Not Shown			
	Parts Bag	4000-0276	1
	Hardware Bag	73520-9269	1
	Owner's Manual	73520-0920	1
	Main Decal Sheet	73520-0310	1
	Decal Sheet	73520-0320	1
	Cap Nut Tool	78640-2629	1

N/A = Not Available

Bold and Underlined parts are to be purchased and installed by Service Centers only. These items may not be sold directly to consumers by Service Centers or Fisher-Price.